MOKE®

Electric MOKE Users Manual

CONTENTS

General Safety and Vehicle Care

Electrical Vehicle and High Voltage Awareness

User Guide

User Care and Preventative Maintenance

Accessories

Technical Specification

Service and Maintenance Records

Frequently Asked Questions (FAQs)

EV Troubleshooting

Quick Reference Guide

PREFACE

Welcome to the global MOKE family! Thank you for choosing the genuine Electric MOKE.

For your greatest satisfaction, your vehicle has undergone extensive development and numerous quality controls throughout its design and manufacture.

Your MOKE has undertaken and passed the safety requirements defined by various international standards, the safety requirements defined by various international standards, for example in Europe M1 Small Series Type Approval requirements have been met.

Your knowledge of this manual and its instructions are imperative for the life of the vehicle and to ensure your satisfaction and safety. Since this manual is an integral part of the vehicle, it must be brought to the attention of any user and transferred to the new owner in case of sale of the vehicle.

For your safety, never carry out or have carried out any modifications to your vehicle that are not approved by MOKE. If you do these may put you in danger and compromise the safety and reliability of your vehicle.

For the purpose of continuous improvement of its products MOKE reserves the right to modify, without notice, the technical characteristics of its products without any obligation to modify the vehicles already marketed, ordered or being delivered.

The illustrations and photographs in this manual are of various vehicles and equipment. As such, some may not accurately reflect the equipment on your specific vehicle. MOKE cannot assume any contractual responsibility for such differences.

Despite all the care taken in producing this manual, MOKE cannot be held responsible for any errors, typographical or otherwise.

SYMBOLS USED THROUGHOUT THIS MANUAL

The following symbols used within this manual call your attention to specific types of information:

WARNING: Serious injury or death. Failure to observe warnings in the "Danger" category will result in serious injury or death.

WARNING: Indicates either an instruction which must be followed precisely, or information that should be considered with great care in order to avoid the possibility of personal injury or injury to others.

CAUTION: Indicates either an instruction which must be followed precisely, or information that should be considered with great care in order to avoid the possibility of damage to your vehicle.

GENERAL SAFETY

WARNING: Never drive under the influence of drugs or alcohol.

WARNING: Never use a mobile phone while driving.

WARNING: Never leave a child alone unattended in a vehicle.

WARNING: Never select reverse gear while the vehicle is moving.

WARNING: Always apply the parking brake when leaving the vehicle.

WARNING: Never attempt to buckle the seatbelt while driving, always carry out this operation when the vehicle is stationary.

WARNING: Never adjust the mirrors while driving, always carry out this operation when the vehicle is stationary.

WARNING: Always respect the rules of the road, especially with regard to ensuring that the driver is correctly licensed and insured.

DRIVING YOUR ELECTRIC MOKE

In your new Electric MOKE the moving parts need to be broken in.
The first 2,000 km (1,200 miles) are required for this. The range may be somewhat lower than the specified values during this time given that:

- New tyres do not yet have maximum grip on the road surface.
- Run in new tyres at a moderate speed for the first 160 km (100 miles).
- New brake pads and brake discs have to be “bedded in” and therefore only attain optimal friction once the vehicle has travelled around 300 km (500 miles).
- The High Voltage battery works to its optimum once the cells are balanced by good charging practice.

WARNING SYMBOLS

If the systems detect malfunctions or defective parts, your vehicle will warn you with lights or messages on the instrument cluster. If you ignore vehicle warning signals, the risk of accidents, injuries and damage to the vehicle may increase. We recommend you familiarise yourself with the meaning of warning lights and messages before starting to drive so that you can respond correctly to the warnings. Stop driving if necessary.

MOKE: A BREATH OF FRESH AIR

The Electric MOKE now offers you a clean energy driving experience without losing any of its iconic design, authenticity or fun!

The owner and operator has a significant part in ensuring safety while driving the Electric MOKE.

High-quality materials and excellent workmanship will keep your car on the road for many years to come. In order to achieve its full potential, the vehicle requires attention and care. That way, you will also be able to rely on your Electric MOKE in critical situations.

SAFETY FIRST

The voltage in the high-voltage vehicle electrical system and high-voltage battery is extremely dangerous.

Touching damaged high-voltage cables, the on-board charger, the high voltage battery or the power electronics can result in a fatal electric shock.

All components of the electrical system are marked with warning stickers. The high-voltage cables are orange.

Do not perform any work on the high-voltage vehicle electrical system, orange-coloured high voltage cables, on-board charger, high-voltage battery or power electronics.

Never damage, remove or disconnect the orange high-voltage cables from the high-voltage vehicle electrical system.

Do not touch components of the electrical system that have been damaged, such as following an accident.

Never remove the high-voltage battery.

The vehicle produces considerably less driving and running noise than a vehicle with a combustion engine. In certain situations - in zones with traffic calming, when reversing or parking, for example - other road users may not hear your vehicle. For this reason your MOKE is fitted with an AVAS (Acoustic Vehicle Alerting System) which generates an artificial noise to warn vulnerable road users, such as pedestrians and cyclists.

GENERAL VEHICLE CHECKS

Check your vehicle regularly (at least once a month and before any long journey) to ensure it is in good technical condition.

In particular, pay attention to the following:

- Tyres are not damaged and have the right pressure and sufficient tread
- Headlights, brake lights and direction indicators all work
- Wiper blades are intact and clear the windscreen of moisture
- Windscreen/windows are unobstructed without any cracks or damage to the glass
- Exterior and interior mirrors are intact and correctly positioned

CHECKING THE LIGHTS

If lights are faulty, your vehicle is not illuminated and hard to see in conditions of poor visibility. Other drivers will see you too late and you could be involved in an accident.

The lights to check are:

- Side lights, dipped beam and high beam
- Day time running lights
- Direction indicators
- Brake lights
- Reversing lights
- Fog light

Check all lights are working. Have any defective lights repaired immediately prior to starting your journey.

MAINTAINING GOOD VISIBILITY

Keeping windows and wiper blades clean and in good working order.

Dirty windscreens and defective wiper blades reduce visibility and dramatically increase the risk of an accident.

KEEPING TYRES IN SAFE CONDITION

- Damaged tyres can burst, especially at high speeds
- Prevent damage to tyres by driving in a manner that protects both your tyres and vehicle
- Cross kerb edges slowly and at right angles if possible
- Avoid driving over steep or sharp kerbs
- Avoid potholes and ruts where possible
- Be mindful of the ground clearance of the vehicle
- Avoid steep ramps

Drive carefully in the following situations:

- Steep uphill and downhill slopes, such as in multi-storey car parks
- Kerbs and speed bumps (approach and exit at <6mph (<10kmh)
- Approaching charging pedestals
- Uneven road surfaces
- Lifting platforms

CHECKING TYRES FOR DAMAGE

Damaged tyres may burst while you are driving. You may lose control of the vehicle. Depending on how often you drive and the conditions, check tyres regularly (at least once a month) for foreign bodies, nicks, cuts, cracks and bulges.

Remember to also check the side walls of the tyres.

If in doubt have the tyres and the entire wheel checked by a qualified specialist workshop.

Do not continue driving with damaged tyres.

Have damaged tyres replaced immediately.

Excessively low or high tyre pressure irreparably damages the tyre and the wheel, lengthens the braking distance and greatly increases the risk of an accident.

If the tyre pressure is too low, power consumption can increase noticeably, and the range may decrease.

Adapt tyre pressure to suit your specific tyres and the payload.

If the vehicle's undercarriage is damaged, park the vehicle safely and contact a MOKE workshop.

FLAT TYRES

If you drive your Electric MOKE with damaged tyres, it may not be possible to steer the vehicle safely depending on your speed. Never continue driving with a flat tyre.

Park the vehicle correctly, safely and have the problem fixed.

SEAT BELTS

Personal injuries can occur at speeds as low as 30 km/h (20 mph) if you are not wearing a seat belt.

- Safety systems only protect you when working in combination.
- Always fasten seat belts tightly, even on short journeys.
- Use one seat belt to secure one occupant only.
- Remove bulky items of clothing (e.g. winter coats).
- Do not place the seat belts across hard or fragile objects (e.g. glasses or ball-point pens).
- Do not twist the seat belts.
- Always make sure unused seat belts are completely retracted.
- Pregnant drivers or passengers should position the lap belt well below their belly and lay the shoulder belt tautly over their chest.
- If worn or damaged, have the belt, belt buckle or attachment points replaced by a MOKE workshop.

- All passengers in the car must use the 3-point seat belts in the car. The vehicle has a maximum capacity of 4.

- Only EU-approved height-based child car seats can be used in the UK. These have a label showing a capital 'E' in a circle and 'R129'.

Any children traveling in the car should be sat in rear of the car with the age and weight suitable child seat supplied by parents who have the full responsibility this is safe and correct. In the UK Child seats are expected for any child <12 years old or <135cm tall, whichever comes first. Please check the regulations in your territory. We would advise all child seats fitted to our vehicles use the ISOFIX system fitted to the vehicle as standard. Before you use a child restraint system read and follow the child restraint system manufacturer's instructions as well as this manual.

Vehicles should be always driven within the legal limits, with a keen awareness of the road and environmental conditions. All Electric MOKEs from MOKE meet European UNECE regulations which also reference the EU WVTA regulations. All drivers should display an awareness that the Electric MOKE is a vehicle without a roof or doors. Extreme care must be taken by the driver at all times, especially when transporting passengers and infants.

LOADING

- Always secure items for transport.
- Always transport objects in the rear lockable storage compartments where possible.
- Always stow loads securely e.g. in the luggage compartment.
- Stow small items in storage compartments and close all lockable storage compartments.
- Never let objects protrude from storage compartments.
- Never place objects on top of the dashboard.
- Do not transport any heavy objects in open storage compartments.
- Provide your passengers with all information regarding safety measures.
- DO NOT load any item to the top of the roof bar assembly unless it is a MOKE accessory fitted by a MOKE Approved Retail Partner.

CHILDREN

Keep children away from live, high voltage, mechanical or hot parts. Keep toxic materials, such as windscreen washer fluid, out of reach of children.

Do not leave children in the vehicle unattended.

DRIVER DISTRACTIONS

You may lose control of the vehicle if you are distracted. Never do the following while driving your Electric MOKE:

- Adjust the mirrors
- Adjust the seat (the seat may move unexpectedly)
- Use a mobile phone or mobile device

Seat and mirrors should be adjusted prior to starting your journey.

Use hands free equipment if permitted in your territory.

DRIVING IN WET OR WINTRY CONDITIONS

In heavy rain, while driving through water or after leaving a car wash, a film of water may form on the brakes delaying the braking action and requiring increased pressure on the brake pedal.

Moreover, after a long drive in wintry road conditions, a coating may form on brake discs and pads that significantly reduces friction and therefore also the braking action.

Brake the brakes dry, especially before parking the vehicle. This will prevent corrosion.

Corroded brakes tend to “judder”. If braking comfort is noticeably impaired, have the brake system checked by a MOKE authorised workshop.

ROAD CONDITION CONSIDERATIONS

Damage to the tyres or vehicle can lead to uneven running or vibration while driving.

You may lose control of the vehicle.

Reduce your speed immediately but without braking sharply.

Stop the vehicle and check the tyres.

If you cannot find a cause for the problem, continue driving carefully and have the problem fixed at the earliest opportunity.

Maintenance and any modifications should only be carried out by qualified High Voltage MOKE Approved workshops or Technicians.

MODIFYING YOUR ELECTRIC MOKE

Any modification to the vehicle can adversely affect safety functions.

Unauthorised work performed during the warranty period may result in claims being invalidated.

Have all maintenance and all modifications to the vehicle performed solely by an approved qualified specialist workshop with qualified technicians.

This ensures that your Electric MOKE will remain reliable and safe to drive and that no damage will occur to your vehicle. MOKE recommends a MOKE International approved partner as they have trained workshop personnel and the necessary parts and tools.

DIAGNOSTICS

The diagnostic socket is used to connect diagnostic equipment in qualified specialist workshops.

Do not connect any equipment to the diagnostic socket.

Do not place any equipment or cables in the driver’s footwell.

SPARE PARTS FOR YOUR MOKE

Only use genuine MOKE International spare parts for your vehicle or spare parts of an equivalent quality that have been manufactured according to the specifications and production requirements of MOKE .

This ensures that your vehicle will remain reliable and safe to drive and that no consequential damage will occur to your vehicle.

You can obtain these parts from a MOKE International partner or a qualified specialist workshop.

MOKE International recommends a MOKE approved Retail Partner as they have trained workshop personnel and the necessary parts and tools.

Only use accessories that are from the MOKE International accessory range or those that have been tested and approved by MOKE.

If other spare parts or accessories are used MOKE refuses to accept liability for any damage caused by their use.

Even if the supplier of other spare parts or accessories is a recognised supplier, the safety of your vehicle may still be compromised.

Using spare parts or accessories that are not approved by MOKE may invalidate your vehicle warranty.

TOWING AND RECOVERY

Never tow-start or push-start the vehicle.

There is a danger of significant damage to the vehicle as a result of tow-starting and push-starting.

Before recovering your vehicle or having your vehicle towed refer to the towing section in this manual on pg 42.

ELECTRIC VEHICLE AND HIGH VOLTAGE AWARENESS

HIGH VOLTAGE WARNING

The voltage in the high-voltage vehicle electrical system and high-voltage battery is extremely dangerous.

Touching damaged high-voltage cables, the on-board charger, the high voltage battery and the power electronics can cause a fatal electric shock.

All components of the electrical system are marked with warning stickers.

The high-voltage cables are orange.

Do not perform any work on the high-voltage vehicle electrical system, orange high-voltage cables, on-board charger, high-voltage battery or power electronics.

Never damage, remove or disconnect the orange high-voltage cables from the high-voltage vehicle electrical system.

Do not touch parts of the electrical system that have been damaged, such as following an accident.

Never remove the high-voltage battery.

CHARGING THE HIGH VOLTAGE BATTERY OVERVIEW

Incorrect charging process, non-observance of the safety precautions and improper handling of the high-voltage battery can cause electric shocks, short circuits, explosions, fire or burns.

Before starting the vehicle remove the vehicle charging cable, close the cover and store the vehicle charging cable in a safe place.

Always observe the specified sequence when charging the high-voltage battery.

Do not unplug the vehicle charging cable from the electrical socket during the charging process.

Finish charging before disconnecting the vehicle charging cable from the electrical socket.

Do not work in or on the vehicle during the charging process.

Ensure that the temperature of the vehicle is between 0 °C and +30 °C during the charging process.

Only use vehicle charging cables that have been tested and approved for charging the high-voltage battery in an electric vehicle (the charging plug standardised in accordance with IEC 62196-2, SAE J1772 or GB/T 20234-2 and the charging process in accordance with IEC 61851-1, SAE J1772 or GB/T 18487 (modes 2 and 3)).

The use of unsuitable or damaged electrical sockets and vehicle charging cables and improper handling of the high-voltage battery can cause electric shocks, short circuits, explosions, fire or burns.

- Do not use extension cables, cable reels, multiple sockets or travel adapters.
- Only use vehicle charging cables that have been tested and approved by MOKE for charging the high-voltage battery in your Electric MOKE vehicle.
- Do not allow your MOKE to go below 10% SoC (state of charge).
- Always carry along the charging equipment that is suitable for the country you are driving in.
- Only connect vehicle charging cables to electrical sockets that were installed professionally.
- Do not connect vehicle charging cables to damaged or dirty electrical sockets.
- Do not use a damaged vehicle charging cable.
- Do not modify or repair any of the electrical components.
- Protect electrical sockets and plug connections from water, moisture and other fluids and liquids.
- Do not use sharp-edged or pointed objects to remove dirt and debris from the charging socket.
- Never insert objects into the charge port on the vehicle.

RANGE MANAGEMENT

Increasing the range potential your Electric MOKE vehicle can be managed through the following actions:

- Engage ECO mode using the driving mode switch.
- Anticipatory driving and regenerative braking can increase energy recovery.
- Do not carry unnecessary objects in the vehicle.
- Too much weight in the vehicle reduces energy savings.
- Check that the tyre pressure is correct. The right tyre pressure reduces the vehicle's rolling resistance.
- Limited use of the vehicles electrical functions e.g. heated front screen increases energy savings.

ENERGY REGENERATION

This is available as standard in Cruise (normal) mode and is more prevalent in Coast (ECO) mode. This re-uses the vehicles current kinetic energy to reduce the energy required to propel the vehicle. You may notice it has a light braking effect when the accelerator pedal is released.

WARNING: Unacceptable use of regeneration

The Electric MOKE has been designed to have a limited amount of energy recuperation called Regenerative braking, or Re-gen.

Regeneration is a system that is used only for energy recovery.

It is not a driver aide and cannot take over any driver tasks.

Do not use the deceleration effect of regeneration as a braking control system. Always use the foot brake for controlled deceleration.

Always be ready to brake and stay a safe distance away from the vehicle in front.

HIGH VOLTAGE CHARGING TIMES FOR AN ELECTRIC MOKE

The great thing about the Electric MOKE car charging is that it's easy to do. There are different home car charging points that you can use depending on what suits you best, so you can be sure you're always ready to hit the road.

The table below shows the estimated time to charge your Electric MOKE.

Charging method 10% SoC to Full*	Typically found at	Charging time	Range(km)/hour
3-pin plug	Home	<4hrs	30km/h
3.6kW Public Charge cable	Home / Work / Leisure	<4hrs	30km/h

CONNECTOR TYPE

Your car is supplied with a Type 2 charging socket with a region specific domestic plug option. (US customers are supplied with a type 1 charger with an adapter for the in vehicle socket).

WHERE YOU CAN CHARGE A ELECTRIC MOKE

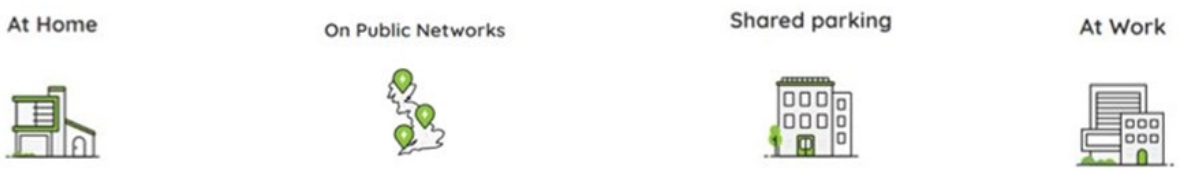

You can charge your Electric MOKE conveniently at home, plug-in when you arrive at work or top up when you're out and about. The standard supplied charger uses a normal domestic plug. You can use public charging station at locations including supermarkets, garages and public car parks.

CAUTION: Charging powers and times depend on various factors, which may increase charging times considerably compared to the values indicated.

These variations can occur because of variables in power supply and conditions:

- Customer-specific installation, e.g. socket used.
- Power output of the country-specific energy infrastructure.
- Fluctuations in the mains voltage.
- Ambient temperature of the vehicle and the charging equipment.
- Temperature of the high-voltage battery and control unit.
- Charge level of the high-voltage battery.
- Age of the high-voltage battery and number of charges completed.
- Current-carrying capacity of the vehicle plug. The amount of energy taken from the mains power supply is greater than the amount of energy stored during charging of the high-voltage battery. The reasons for this include physical charging losses and the use of energy to control the temperature of the high-voltage battery.
- For physical and chemical reasons the charging speed decreases as the charge level approaches 100%.

HIGH VOLTAGE CHARGING PROCESS

WARNING: Before you charge the Electric MOKE for the first time, please familiarise yourself with all the High Voltage safety instructions in this Handbook. Your charger is supplied with a specific charger booklet.

THE CHARGER

The standard charger comes with a domestic plug which runs into a power box. The power box has 3 lights:

I. Power (green light)
II. Charge (green light)
III. Discharge (blue light)
IV. Fault (red light)

- The Electric MOKE Charge Port is located in the rear right hand driver side compartment.
- Ensure ignition is off and the vehicle is in neutral with the hand brake applied.
- Unclip, remove and store the compartment lid safely.

START-UP CHARGING

1. Open the charge socket compartment on the side pod of your MOKE.
2. Remove the charge cable out of the boot of your MOKE, visually checking for any signs of wear or damage.
3. Place the power box flat on the ground and insert the plug into the supply socket.
4. Check the charge box is indicating a green light and then connect the charger to the vehicle by pushing the plug firmly into place.
5. Charging begins when the charging indicator on the power box flashes.

CHARGING COMPLETED

1. When the charging indicator light stays on the battery charging has finished.
2. State of Charge Gauge located on the dash fascia will indicate charge status as a percentage.
3. Turn off the power supply.
4. Once the indicator light is out, remove the charging plug from the vehicle socket. Replace the charging socket cover to protect it.
5. Return the cable to the vehicle storage position.

STORAGE COMPARTMENTS

Each compartment is opened by pressing the button firmly down to release the catch.

MOKE®

USER GUIDE

GETTING STARTED

Before driving this Electric MOKE vehicle please familiarize yourself with the vehicle, all safety advice and vehicle controls.

The key:

WARNING: Never remove the high-voltage battery.

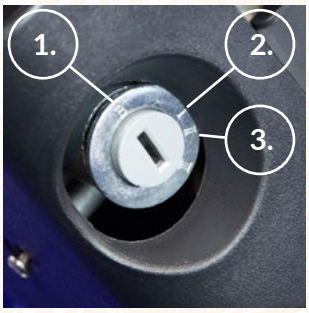

1. Off/Steering column locked
2. Unlock steering lock (I)
3. ON (car and instrument panel live) II

STARTING THE VEHICLE

WARNING: Never start and leave the vehicle electrically live if the vehicle is in an enclosed area or left unattended.

WARNING: Never rest or sleep in a vehicle with the ignition switched on or if the High Voltage system is live.

WARNING: When activating or deactivating the High Voltage system always make sure parking brake is applied.

WARNING: Make sure the transmission is in Neutral.

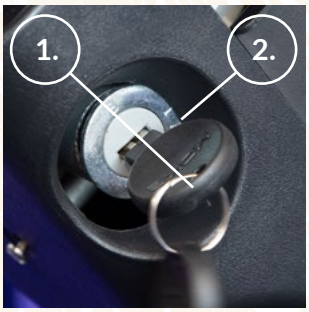

1. Insert key into the ignition switch.
2. Turn key to position 1 to initialise the car, each position will click.
3. Then turn to position 2. This allows the car to be put in gear and driven.
4. DO NOT ROTATE to position 3 as this will stop the car going into gear. If you do this switch the ignition off and follow step 1 and 2.

WARNING: Before exiting the vehicle always switch off the High Voltage system, make sure that the vehicle is stationary and apply the parking brake.

DRIVING

ELECTRIC DRIVE TRANSMISSION AND GEAR SELECTION

Once the vehicle has been started, please be aware that it will be silent whilst stationary.

The odometer (speedo) will be illuminated and display the current gear in the LCD screen.

The vehicle will always start in N - Neutral.

To put the car in gear make sure you are stationary and the brake pedal is depressed.

The gear is displayed in the central LCD screen (D/N/R).

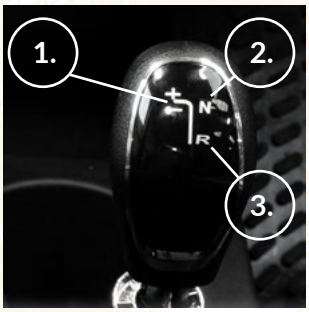

1. Drive
2. Neutral
3. Reverse

DRIVE MODE

The Electric MOKE offers drivers 3 selectable drive modes. The mode the vehicle drives in can be chosen using the Drive Mode Switch. You can toggle through the options using the switch placed on the dashboard.

1. Cruise /(Normal): full torque; limited top speed, mild regeneration active
2. Coast/ (ECO:): limited torque; regeneration active
3. Beach: limited torque; limited top speed

When selected the respective icon on the instrument cluster will light up indicating which mode has been selected.

By default, the vehicle will always engage in Cruise (Normal) Mode.

INSTRUMENTATION AND WARNING LIGHTS

The main instruments are located on the dashboard behind the steering wheel and provide the driver with information, indicators and warning indicators on the vehicle systems.

1. State of Charge gauge
2. Speedometer/Odometer
3. Motor Temperature gauge
4. 12v Socket
5. Drive Mode Switch
6. Immobiliser switch
7. Rear fog lamp
8. Hazard lights
9. Heated Windscreen

STATE OF CHARGE (SOC) GAUGE

The SoC gauge will display the current SoC in the High Voltage Battery.

CAUTION: It is not recommended to attempt to run the Electric MOKE when the SoC is less than 10%.

Always seek to charge your Electric MOKE at every convenience.

MOTOR TEMPERATURE GAUGE

The Motor Temperature Gauge will display the current temperature of the Electric Drive Motor.

CAUTION: It is not recommended to run the vehicle if the Electric Motor temperature gauge is in the RED high zone.
Stop the vehicle in a safe place immediately and seek technical advice from your MOKE dealer Retail Partner or Service provider.

SPEEDOMETER/ODOMETER SYMBOLS

The speed is indicated in kilometres per hour (KPH) or miles per hour (MPH) depending on market.

- Low brake fluid
- Low voltage (12v) battery charge warning indicator
- Parking Brake
- Charging plug inserted
- Charging in progress
- Indicators- directional Left and Right
- Full beam
- Side lights are on
- Rear fog lamp is on
- HV battery fault
- Safety belt warning indicator
- General EV fault
- The car is in gear. Drive (D) or Reverse (R)
- Service indicator
- Beach Mode enabled
- ECO Mode enabled
- Motor fault
- Low speed operation activates AVAS (acoustic, vehicle, alerting, system)

AUDIO SYSTEM

WARNING: Before driving this Electric MOKE, ensure that your mobile device is connected via Bluetooth and that you have pre-selected you radio channels. DO NOT attempt to do this whilst the vehicle is being driven.

Your Electric MOKE vehicle is fitted with a watertight stereo receiver offering DAB / FM and Bluetooth functionality.

DAB RADIO

1. ENT: Radio settings menu. A short press whilst in Radio (DAB or FM) will enter the settings menu
2. Power switch: on and off
3. APS: radio tuning. In DAB mode a short press will autotune. In FM mode a long press will start the auto pre-set function
4. Display screen
5. Mode Switch: a short press between DAB, FM and Bluetooth. A long press opens the audio settings menu.
6. Volume control: up and down
7. Previous switch: previous track or station
8. Play / Pause: used in Bluetooth mode
9. Next switch: next track or station

A short press of the APS switch will perform a full scan of the DAB stations.

Following the full scan the stations can be navigated using the NEXT and PREVIOUS switches.

When the desired station is displayed it can be confirmed with a long press of the ENT switch.

DAB mode has its own specific settings menu that can be entered via a short press of the ENT switch.

The menu can be navigated using the NEXT and PREVIOUS switches and a selection is confirmed with a long press of the ENT switch.

The menu can be exited with a short press of the ENT switch.

The menu options are outlined below:

Manual tune	-	Select a specific frequency to tune to.
DRC	-	The Dynamic Range frequency sets the range of volume that the radio plays. Setting to high increases this range.
Station Order	-	Stations can be ordered either alphanumerically or by ensemble.
Prune	-	Removes the stations with a weak signal.
System	-	Enter the system menu.

FM RADIO

A short press of the APS switch will perform a full scan of the FM stations.

A long press of the APS switch will enter the Auto-Set mode. APS stores 18 stations with strongest reception.

Following a full or APS scan the stations can be navigated using a short press of the NEXT or PREVIOUS switches.

To manually select an FM channel long press either the NEXT or PREVIOUS switch.

Frequency can now be navigated by a short press of the NEXT or PREVIOUS switches.

FM mode has its own specific menu that can be entered via a short press of the ENT button.

The menu can be navigated using the NEXT and PREVIOUS switches and a selection confirmed with a long press of the switch.

The menu options are outlined below:

Scan Setting	-	Scan for only stations with a strong signal or all
Audio Setting	-	Play in either Mono or Stereo format
System	-	Enter the system menu

BLUETOOTH

To pair a mobile device with the HD832D head unit turn on the Bluetooth option on your mobile device.

When in Bluetooth mode, long press the APS button until the unit displays “Bluetooth Discoverable”.

Select Autosound from the list of available devices.

Once paired the PLAY / PAUSE switch will play or pause playback.

A short press of the NEXT or PREVIOUS switches will skip tracks.

A long press of the NEXT or PREVIOUS switches will fast forward or rewind the current track.

AUDIO SETTINGS MENU

The audio settings menu allows you to change the bass, treble, fade and balance levels.

Enter the menu with a long pause of the MODE switch.

The level of each setting can be adjusted using the VOLUME- and VOLUME+ switches.

Short press the MODE switch to move to the next setting in turn then back to the normal screen.

VIEW AND ADJUST THE CLOCK

A long press of the PLAY / PAUSE switch will display the clock.

A long press of the PLAY / PAUSE switch will enter the time adjust setting. The hour digits should flash.

Use the VOLUME- and VOLUME+ switches to adjust the time and short press of the PLAY / PAUSE switches to switch between hours and minutes.

A long press of the PLAY / PAUSE switch will confirm the new time.

SEATING

WARNING: All passengers in the car must use the 3 point seat belts in the car. The vehicle has a maximum capacity of 4.

WARNING: Do not adjust the driver seat while the vehicle is moving.

WARNING: After adjustment, always make sure the seat has fully engaged into position.

WARNING: DO NOT fit a child seat to the front passenger seat.

CAUTION: If it is difficult to adjust the seating position check for any obstacles.

SEATING

The Electric MOKE is fitted with two four-way manual adjustable front seats. The correct sitting position is important for safe and fatigue-free driving.

To adjust the driver seat position to suit individual requirements proceed as follows:

- Adjust the seat's fore-and-aft position so that your legs are not fully straight and your foot is touching the entire pedal surface when pressing the pedals fully.
- To move the seat forwards or backwards lift the adjuster bar and move the seat fore and aft as required.
- Release the adjuster bar to lock the seat in position.
- Ensure the seat is locked into position before driving.
- Grip the top half of the steering wheel. Set the backrest angle and the steering wheel position so that your arms are almost outstretched. Your shoulders must still rest on the backrest.
- Adjust the seat's fore-and-aft position further if still required.
- To recline the seat forwards or backwards lift the recliner handle and move the seat back forward or backward as required.
- Release the handle to lock the seat in position.

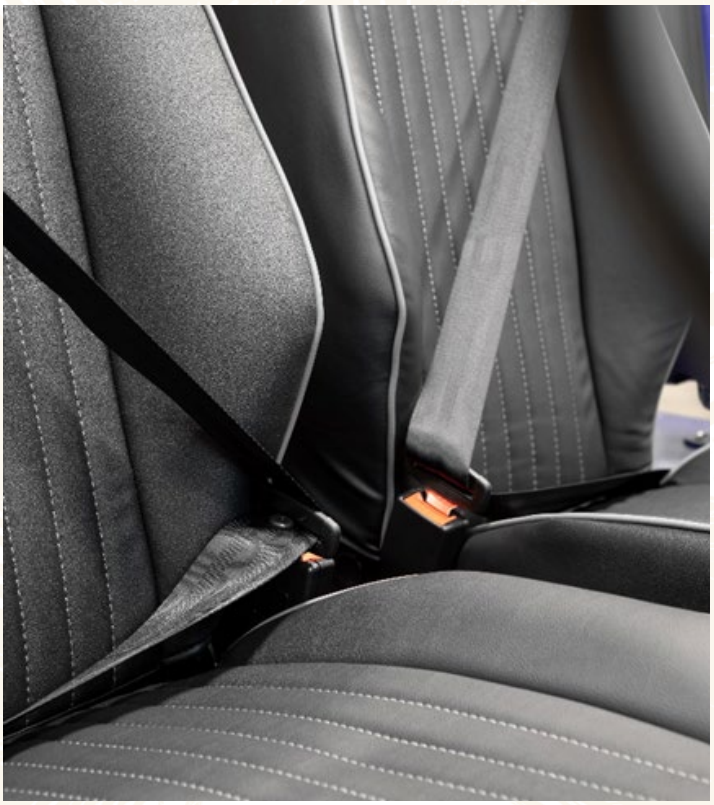

REAR SEATS

The Electric MOKE is fitted with two, non-adjustable, rear seats and with two ISOFIX positions for a child's seat.

CAUTION: The rear seats are fitted with two ISOFIX positions for child seats. Always follow the instructions provided by MOKE and/or the child seat provider when fitting a child seat into the rear seats.

CAUTION: The rear seating is only designed and certified for TWO rear occupants. DO NOT exceed this number.

	Front Passenger	2nd Row Left	2nd Row Right
Seat position number	3	4	6
Seating position suitable for universal belted (Yes/No)	Yes	Yes	Yes
i-Size seating position (Yes/No)	No	No	No
Seating position suitable for lateral fixture (L1/L2)	No	No	No
Largest suitable rearward facing fixture (R1/F2X/F2/F3)	-	R2	R2
Largest suitable forward-facing fixture (F1/F2X/F2/F3)	-	F3	F3

For your safety the seats have integral head restraints. These are non-adjustable.

All seats are fitted with an occupant sensor. This will sound an alarm and light up a warning light if the occupant does not fit their seatbelt.

WARNING: Unfastened or incorrectly used seat belts do not offer any protection in an accident.

WARNING: Replace a seatbelt if it is damaged or if the seatbelt has retained a passenger in the event of the vehicle being involved in an accident.

WARNING: Keep the seat belt webbing clean and free of contamination of any type. Use mild soapy water to clean the webbing if necessary.

WARNING: Always wear seat belts for any journey make sure the seat belt is positioned correctly low across the front of the pelvis, chest and shoulders.

WARNING: Make sure all seat belts are in good condition and not damaged.

Never use one seat belt for two people at the same time.

Remove any loose or bulky items of clothing that prevent the seat belt from fitting correctly and restrict your freedom of movement.

Do not lay the seat belt across hard or breakable objects (glasses, ball-point pens, pipes, etc.). These objects may pose an additional risk of injury.

Belt straps must not be twisted or loose.

Ensure that the seat belts are fully retracted when not in use to protect them from dirt and damage.

FASTENING

Make sure that the seat and occupant are correctly positioned.
Pull the seat belt out smoothly, making sure the seat belt sits in the correct position halfway between the shoulder and neck over the collar bone.

Pass the seat belt down to the seat belt buckle.

Engage the seat belt metal tongue into the seat belt buckle. Make sure the seat belt buckle clicks. There is a warning symbol displayed on the speedo and an audible noise sounds.

RELEASING

CAUTION: To prevent the seat belt from retracting too quickly, hold the seat belt before pressing the seat belt buckle release button.

Hold the seat belt.
Press the red seat belt buckle button.
Guide the seat belt back to its resting position.

MIRRORS

The vehicle is fitted with two external rear view mirrors mounted on the front windscreen pillars.

Ensure the mirrors are correctly adjusted prior to driving.

Adjust the mirrors by manually grasping the mirror assembly and arranging it until satisfied with respect to your driving position.

- Always keep rear-view mirrors clean.
- Make sure all rear-view mirrors are in good condition and not damaged.
- Replace a rear-view mirror if it is damaged.
- Never adjust mirrors while driving.
- Do not obscure or cover the mirrors whilst driving.
- Vehicles or objects appear smaller in convex mirrors and further away than they are in reality. This may lead to incorrect assessment of the driving situation and an accident.
- Take account of distortion when estimating the distance of vehicles behind you and when parking.

LIGHTS

Once sat in the drivers seat the left- hand multifunction switch on the steering column controls the following lighting functions:

Position 1: Off

Position 2: Side lights ON (the same image will show on the central speedometer/ odometer

Position 3: Headlamps on (dipped beam)

These are activated by rotating the switch anti-clockwise to each position.

Initial downward inclination of dipped beam

ADJUSTING YOUR HEADLIGHTS

This may need to be done when travelling abroad or during the life of the vehicle. The LED headlights can be adjusted left and right aswell as an upward and downward movement of the beam.

This is a simple operation, firstly remove the outer chrome trim on each headlight. This is held in place with a single screw at 6 o'clock.

Once removed the light can be adjusted using the adjustment screws at 12 and 9 o'clock.

When correct please ensure all trims are returned correctly and sufficiently torqued.

This operation should be carried out by a MOKE approved Technician to ensure correct adjustment and fitting.

HIGH BEAM

The high beam function is to be used whilst there are no other road users coming towards you. The high beam function has a continuously on and a flash function.

Continuously on: with the headlamps active push the multifunction switch forwards to a latched position.

Flash: pull the multifunction switch towards you, then release.

Be aware: the High Beam function can be operated with the ignition on or off and will remain active while the switch is held in place. Usage will drain the battery.

DIRECTIONAL INDICATORS

Move the multifunctional switch UP for right hand indication. DOWN for left hand indication.

The directional indicators operate when the ignition switch is in position II.

To indicate a left or right turn move the multifunction switch down or up until latched in position.

The direction indicators will automatically cancel and return to the centre position when the turn has been completed.

When direction indicators are active an audible ticking and a flashing green warning lamp on the speedometer indicate that the direction indicators are functioning.

OTHER LIGHTS

Switches are located on the dashboard. For dashboard layout see page 18.

Rear fog light- switch 7

Hazard lights- switch 8

Press once to operate, press again to switch off.

WASHERS AND WIPERS

These are operated by the right hand multifunction switch on the steering column. To operate the wipers move the switch by pushing up or down.

Position 1: Wipers Off

Position 2: Intermittent windscreen wipe

Position 3: Low speed wipe

Position 4: High speed wipe

In position 2-4 the wipers will operate continuously until the multifunction switch is rotated to position 1 (as shown in image).

WINDSCREEN WASH/WIPE

The washers are activated by twisting the multifunction switch anticlockwise. When released the switch will return to the position above and the wipers will continue for 3 more wipes.

ACCESS PANELS AND STORAGE COMPARTMENTS

The Electric MOKE is an open top leisure vehicle therefore is not fully waterproof. Whilst every effort has been made to prevent water ingress invariably there is a risk that personal items and effects may get damaged if stored (plan of panels shown on page 15).

WARNING: Do not store items of value in the car over night or when the vehicle is unattended.

WARNING: Do not put items of value or electronic components in the side stowage bins or vehicle at any time.

CAUTION: Always ensure the compartment lids are replaced and secure before and after use.

CAUTION: Always ensure the rear trunk is locked when not in use and when driving.

CAUTION: Do not store items on top of the dashboard.

At point of new delivery your warning triangle and car tool kit will be supplied in this stowage trunk. This trunk is for transportation of items not for storage.

CENTRAL VEHICLE STORAGE

Two cup holders are supplied for both front and rear passengers.

INTERIOR

The MOKE is unique in the fact the interior has to be as strong and durable as the exterior. Every effort has been made to choose waterproof fittings and switches.

The Electric MOKE comes standard with four rubber floor mats fitted in the front and rear.

Unsuitable or improperly secured floor mats can restrict pedal travel or interfere with pedal operation.

The accelerator pedal may be inadvertently actuated or the brake pedal blocked. This can result in an unexpected increase in speed or make braking more difficult.

Only use floor mats that are suitable for the vehicle. Secure floor mats properly and do not place them loosely on the floor.

Do not lay several floor mats on top of each other.

Ensure that the floor mats are securely fitted again after they have been removed, such as for cleaning.

ANTI-THEFT PROTECTION- IMMOBILISER AND SECURITY

CAUTION: Remove the keys from the car

CAUTION: Close all storage compartments

CAUTION: Remove valuables, car papers, phone and house keys from the vehicle

CAUTION: Lock the steering wheel / column

To improve the Anti-Theft protection the Electric MOKE is fitted with a Thatcham approved factory fitted Immobiliser System.

There is no alarm fitted to the Electric MOKE.

Before leaving the vehicle always follow the cautionary instructions below.

The immobiliser fob is fixed to every driver's key ring. There is a transponder (electronic component) with a stored code.

The immobiliser can only be deactivated and the vehicle rendered ready for operation with an authorised driver's fob.

When the immobiliser is activated a red LED on the dashboard will flash alerting users that the vehicle is immobilised.

ACTIVATION AND DEACTIVATION

The activation of the immobiliser is automatically carried out 25 seconds after having switched off the ignition key and if the transponder is out of range.

The red LED starts to flash every 2 seconds.

The range is a distance of 5m around the vehicle in open area without the presence of obstacles.

The system disarms automatically when the transponder approaches the vehicle.

When deactivated the red LED will stop flashing.

EMERGENCY DISARMING

If the transponder does not work the security system can be deactivated using the electronic key.

Insert the electronic key in the receptacle.

The system is deactivated and will allow the vehicle to start.

The system will activate after 20 seconds when the ignition is turned off.

IMMOBILISER TRANSPONDER MAINTENANCE

LOW BATTERY SIGNALLING

Pay attention to the battery charge of the tags and, if necessary, replace them. The continuous reduction of the transmission distance of the transponder is a symptom of the lowering of the battery charge. Moreover, by pressing the tag button the LED flashes intermittently: 1 flash = low battery; 4 flashes = battery charged.

REPLACING THE BATTERY

To open the transponder use a small screwdriver to open the hook of the key ring, as shown in Figure 1 and separate the two parts.

The battery is a CR2032 battery.

Remove the battery and dispose of it responsibly.

Handle the new battery carefully by touching it only on the side walls.

Insert the new battery so that it is centred in relation to the metal blade.

Close the plastic parts by overlapping and pressing them together.

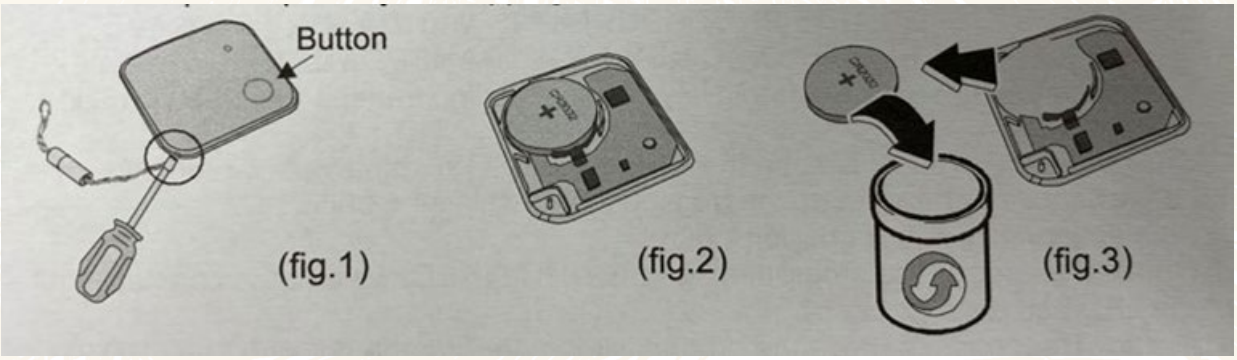

CAUTION: This product contains a button / coin battery: do not swallow the battery. Keep new and used batteries out of the way of children. If you think the battery may have been swallowed or placed inside any part of your body seek medical help immediately.

CAUTION: Do not charge or incinerate used batteries as they could explode.

CAUTION: Do not dispose of used batteries with other waste.

MOKE®

OWNER CARE AND MAINTENANCE

OPENING THE BONNET

WARNING: Ensure ignition is off and High Voltage system is de-activated.

WARNING: To prevent injury always ensure the bonnet prop is correctly located and secure before working under bonnet.

CAUTION: There is a risk of damage to the bonnet or windscreen wipers.

CAUTION: Make sure that the windscreen wipers are not folded forwards when opening the bonnet.

CAUTION: Always switch off windscreen wipers before opening the bonnet (wiper stalk in position 0).

- Rubber bonnet straps are located at the front of the bonnet.
- Use the T shaped handle to pull upwards and release the catch.
- Manually lift up the bonnet, making sure there are no obstructions.
- Be careful not to drop the bonnet or push it too far back against the windscreen.
- The bonnet support is located inside the engine bay behind the headlights.

The support is hinged on the left hand side.

- Lift up the support and place it against the bonnet.
- Once your checks are over replace the support securely within the clips and lower the bonnet carefully.
- Make sure both rubber straps are reattached before driving.
- Be sure to check the straps regularly for damage and wear.

CHECKING VEHICLE FLUIDS AND THE ENGINE BAY

WARNING: Before working in the engine bay, ensure the hood is firmly secured in the open position to prevent any injury.

CAUTION: Brake fluid is corrosive! Immediately clean up any spills.

CAUTION: Make sure the vehicle is on level ground.

THE ELECTRIC MOKE MIGHT JUST BE THE MOST USER FRIENDLY VEHICLE TO CHECK!

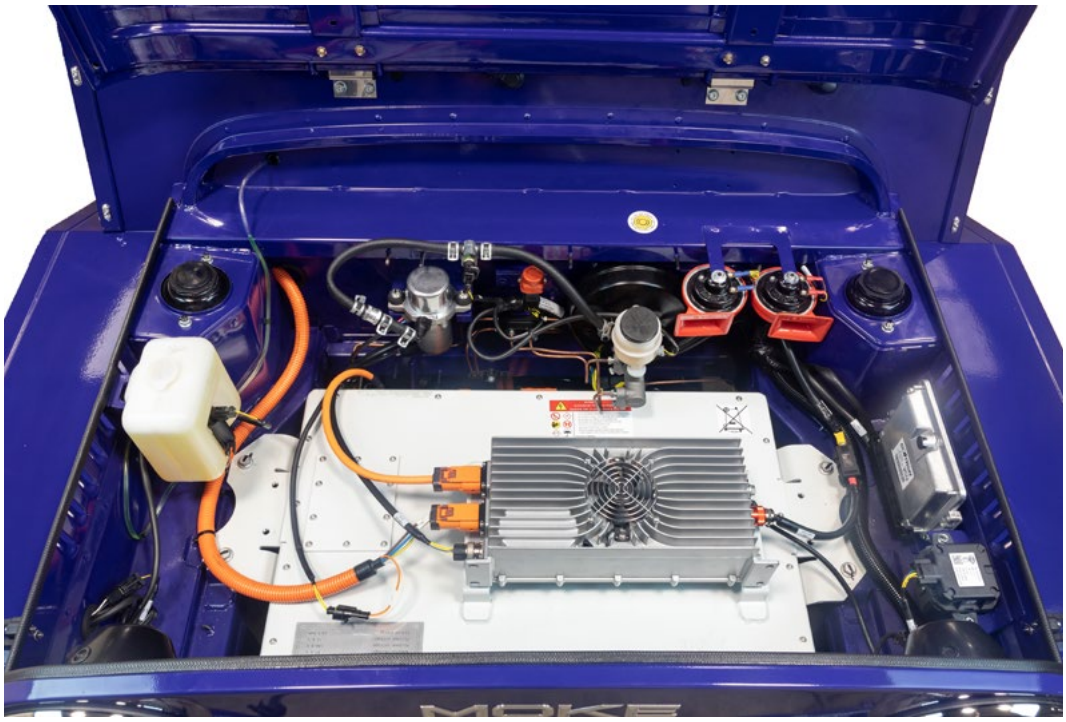

The only fluid owners need to check is the washer fluid (pictured here on the left hand side)

CHECKING VEHICLE FLUIDS AND THE ENGINE BAY

WARNING: Check the washer fluid frequently and top up if required.

CAUTION: Use only recommended washer additive.

- The washer fluid reservoir is located on the left-hand side of the engine compartment.
- Remove the lid and fill as required or as per manufacturer instructions.
- Do not overfill.

BRAKE FLUID

WARNING: Check the brake fluid frequently. If brake fluid usage is significant seek professional assistance urgently.

WARNING: Do not touch the Brake Fluid Reservoir unless you are a trained motor technician.

Your Electric MOKE uses D.O.T. 4 Brake fluid and this will be checked at every annual service. If for any reason you are concerned about your braking system please contact a MOKE Authorised Repairer and seek assistance.

WIPERS AND WASHERS

CAUTION: Do not open the bonnet if the wiper arms have been leveraged off the screen.

Please insert the following information in the owner's manual at the pages indicated.

Insert at page 35 onwards

Powertrain

HV Battery

The EV 10.5 Prime Battery is Safe and reliable Product.
It's maintenance-free, Eco-friendly, robust and proven BMS control.

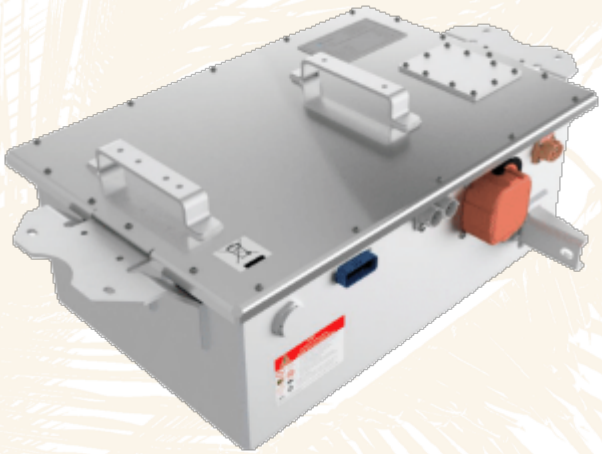

Warning

Do not service or maintain vehicles without vehicle high voltage architecture education. Improper vehicle disassembly can cause serious injury or death. Such activity must be done by Moke's service partners.

Environmental requirements

Parameter	Value
Operating temperature	-20ºC to 45ºC
Recommended temperature	15ºC to 30ºC
Storage temperature	-10ºC to 45ºC
Maximum relative humidity	85% (non-condensing)
Altitude	<2000 m

Submerged Vehicle

If your Moke has been exposed to flooding, extreme weather conditions or has otherwise been submerged in water (especially in salt water), please contact your insurance company and Moke service partner for support. Do not attempt to operate the vehicle before Moke Service has inspected it, but you should tow or move it away from any structures.

Note

Damage caused by water is not covered under warranty.

Performance	
Nominal voltage	87.6 V
Operating voltage range	72 – 100.8 V
Nominal capacity	120 Ah
Installed energy @100%DoD	10.5 kWh
Battery usable energy (0.5C/0.5C rated at 25°C)	10.0 kWh
Max. charging current	120 A
Max. discharging current	120 A
Cycle life	>5000 cycles, acc. To warranty conditions
Communication	
Communication	CAN 2.0B
General specifications	
Cell technology	NMC – Lithium Nickel Manganese Cobalt Oxide (LiNiMnCoO2)
Operating temperature	Discharge -10°C to +50°C Charge 0°C to +50°
Recommended operating temperature	15°C to +30°C
Cooling	Natural convection
Protection rating	IP 65
Dimensions (L x W x H)	912 x 564 x 304 mm
Weight	77 kg

Traction Drive Motor

Model No : ABM 33.6kW
Type : 3 Phase Delta Wound Induction
Max Hourly Output : 10.5 KwH

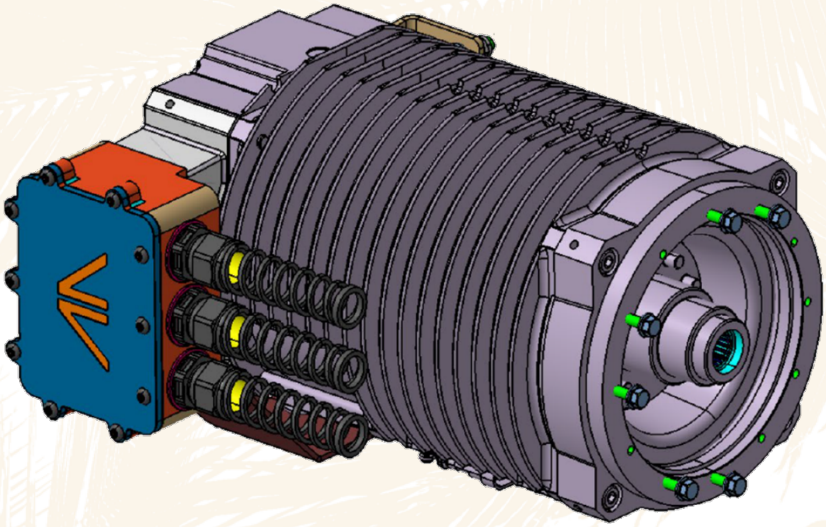

Warning

The ABM Motor has no parts that an owner or a non-Moke authorized service technician can service. Under no circumstances should you open or tamper with the motor. Always contact Moke to arrange for motor servicing.

Clean the windscreen and the wiper blades regularly with a clean, soft cloth and water with a mild liquid detergent.

Lift the wiper blades from the screen and inspect for any damage.

Replace the blades if necessary.

WINDSCREEN WASHERS REMOVAL

1. Move the wiper arm away from the screen.
2. Rotate the wiper 90 degrees.
3. Squeeze the wiper blade retaining clip.
4. Remove the wiper blade from the arm.

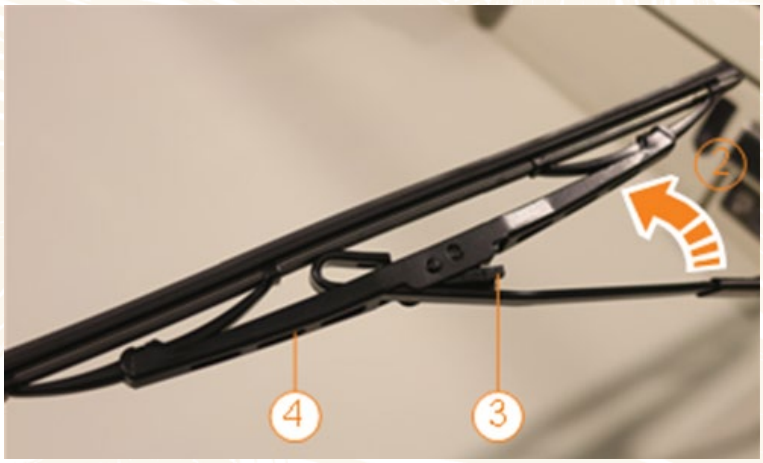

WIPER BLADE REMOVAL

Two windscreen washer nozzles are mounted under the front windscreen.

Each nozzle directs two spray patterns to the windscreen.

If a washer jet nozzle becomes clogged with debris or build-up its performance can be reduced.

There are several methods for removing any blockage:

Dip a small, soft-bristled brush (such as an old toothbrush) in warm water and scrub in and around the nozzle to clear away any dirt or debris. Use a can of compressed air to blow a concentrated stream of air into the clog to loosen it and to blow away any debris from the nozzle.

If your washer performance is compromised please contact your authorised MOKE Repair agent urgently.

BULB REPLACEMENT

CAUTION: Please note that all lights on the Electric MOKE use a Low Voltage LED sealed system. Therefore it is not possible to replace the bulbs on the sealed systems.

CAUTION: Attempting to repair the individual lighting unit will invalidate the warranty.

In the event of a lighting failure please contact your nearest MOKE Retail Partner or recognised technician.

FUSE REPLACEMENT

WARNING: Fuse failure can cause a circuit to become inoperative.

CAUTION: Never replace a blown fuse before fixing the cause.

CAUTION: Make sure a new fuse is the correct rating (amperage).

CAUTION: If a fuse is blown contact a MOKE Retail Partner or approved Technician.

Note: the vehicle has only one fuse box.

The in-vehicle fuse box is in the left hand side rear Stowage Compartment.

A Ignition	B Heated Front Screen Relay
C Vacuum Pump relay	D Horn Relay

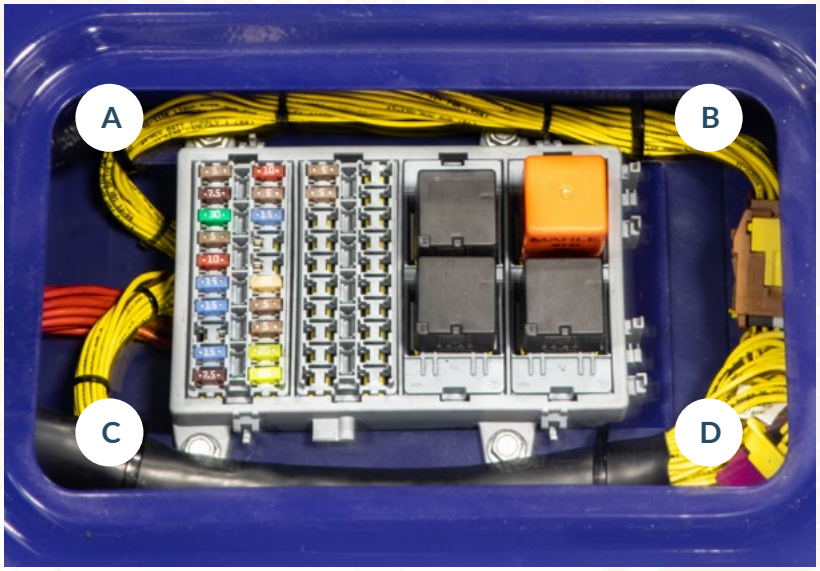

FUSE IDENTIFICATION

	BOX A	
ID	TAG	AMP
F01	OBD PWR.INST	5A
F02	AVAS	7.5A
F03	H.SCREEN	30A
F04	TURN	5A
F05	BMS	10A
F06	VCU A/B	15A
F07	VCU BATT	15A
F08		
F09	HORN	15A
F10	BRAKE.LT	7.5A
F11	VACC PUMP	20A
F12	IGN PWR	20A
F13	RADIO BK.UP	5A
F14	IMMO	5A
F15	HEADLIGHT	25A
F16		
F17		
F18	WIPER.MOT/SW	15A
F19	AVAS	5A
F20	RADIO	10A

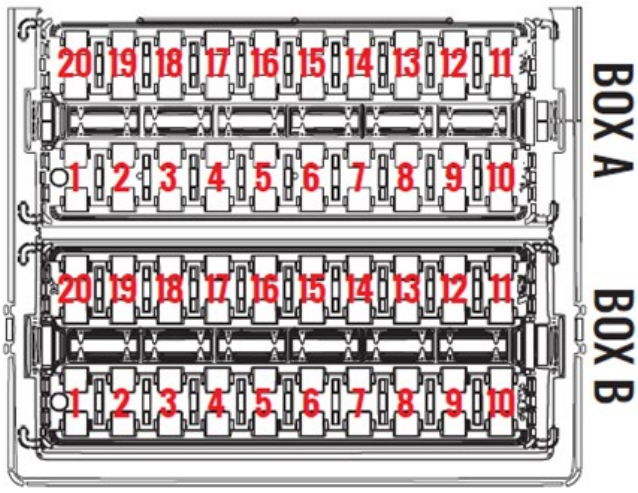

	BOX B	
ID	TAG	AMP
F01	R.FOG.SW / DIP.BEAM	5A
F02	S.LIGHT OUT / S.LIGHT IN	5A

12V BATTERY MANAGEMENT

WARNING: Make sure open flames or other sources of ignition are not allowed near the battery.

WARNING: When working near or handling the battery always wear suitable eye protection and clothing.

WARNING: Make sure battery fluids do not encounter eyes, skin or clothes. Immediately remove all clothing affected, flush the eyes or skin with water and seek medical assistance.

WARNING: Make sure the battery vent pipe and cell plugs are located correctly at all times.

WARNING: Thoroughly wash hands after handling or working with the battery.

WARNING: DO NOT attempt to jump start the car. If the 12V system does not function, contact your MOKE Retail Partner or approved technician.

CAUTION: Always allow a frozen battery to thaw.

CAUTION: Use caution with all metal objects when working near the battery.

Note: if the High Voltage Battery is maintained on a permanent charge when the vehicle is not in use, a function of the DC-DC converter is to maintain a charge to the 12V battery also.

However, it is best practice if the vehicle has not been used for a long period to carry out a check of the state of charge of the battery every month. The 12V battery is located in the left-hand front stowage compartment.

State of charge should ideally be 12.7V or higher.

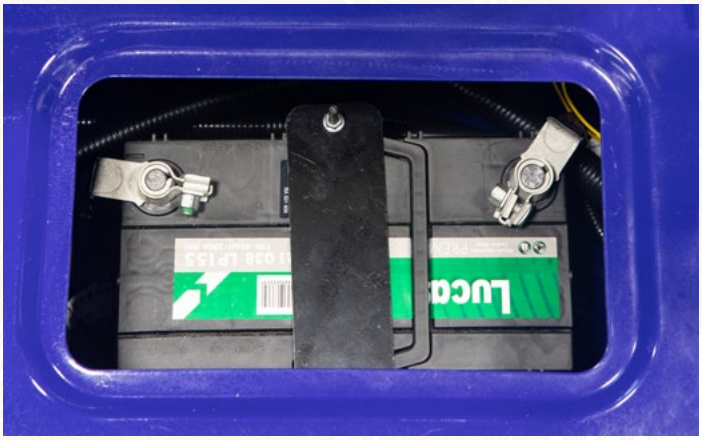

TYRES

WARNING: Good tyre maintenance and condition contributes to safety and the correct functioning of the vehicle.

WARNING: Poor tyre maintenance and condition can affect road holding, steering and braking of the vehicle.

WARNING: This vehicle has been designed to use specific tyres of the correct type, manufacturer and dimensions with the correct inflated pressure.

WARNING: Make sure wheel nuts are fully seated before finally tightening the nuts in alternate sequence.

WARNING: Thoroughly wash hands after handling or working with the battery.

CAUTION: Do not fit tyres with a different tread pattern, size or speed rating.

All tyres fitted as original equipment include tread wear indicators (TWI) in their tread pattern.

Tyres should be replaced by an experienced tyre fitter prior to reaching the minimum legal standard 1.6 mm depth the indicators become level with the tyre surface.

TYRE SIZE

The recommended tyre size for the vehicle is 165/65/R13 (Speed rating 77 - Load rating T)

TYRE PRESSURE

The recommended tyre pressure for the vehicle is:

Front - 32 PSI / 2.3 Bar.

Rear - 32 PSI / 2.3 Bar.

Note: the recommended tyre pressures give optimum ride and handling characteristics for all normal usage. Tyre pressures should be checked on a weekly basis.

EMERGENCY PUNCTURE REPAIR

Your MOKE is fitted with an emergency puncture repair kit. This is the standard equipment with the car and seen as an quicker and easier option than changing a wheel. For safety notes please see wheel changing warnings below.

WARNING: This repair is ONLY temporary and should be used to get you to a safe place to organise a new tyre.

CAUTION: The emergency repair kit is a non toxic water based option that does not damage your tyres. However take care when operating as it uses a high pressure application.

How it works: it pumps air and tyre sealing solution through the air valve into the damaged tyre. The solution finds the hole and blocks it. This is a temporary seal so you can drive to a garage for a full repair.

SNOW TRACTION

In the event that you decide to venture out in your Electric MOKE during snowy conditions we advise the use of the following easily fitted snow traction device:

Autosock, size AS540 for tyre size 165/65/R13, to be placed on both wheels on the rear axle.

Fitting instructions regarding the correct use of the snow traction devices can be found on the Autosock website or in the products user manual.

WHEEL CHANGING

Jacking points:

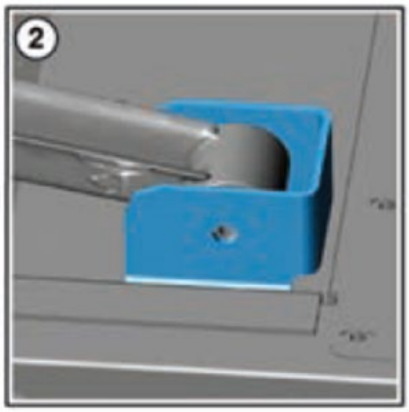

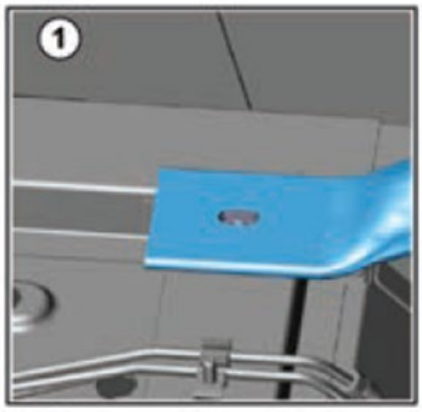

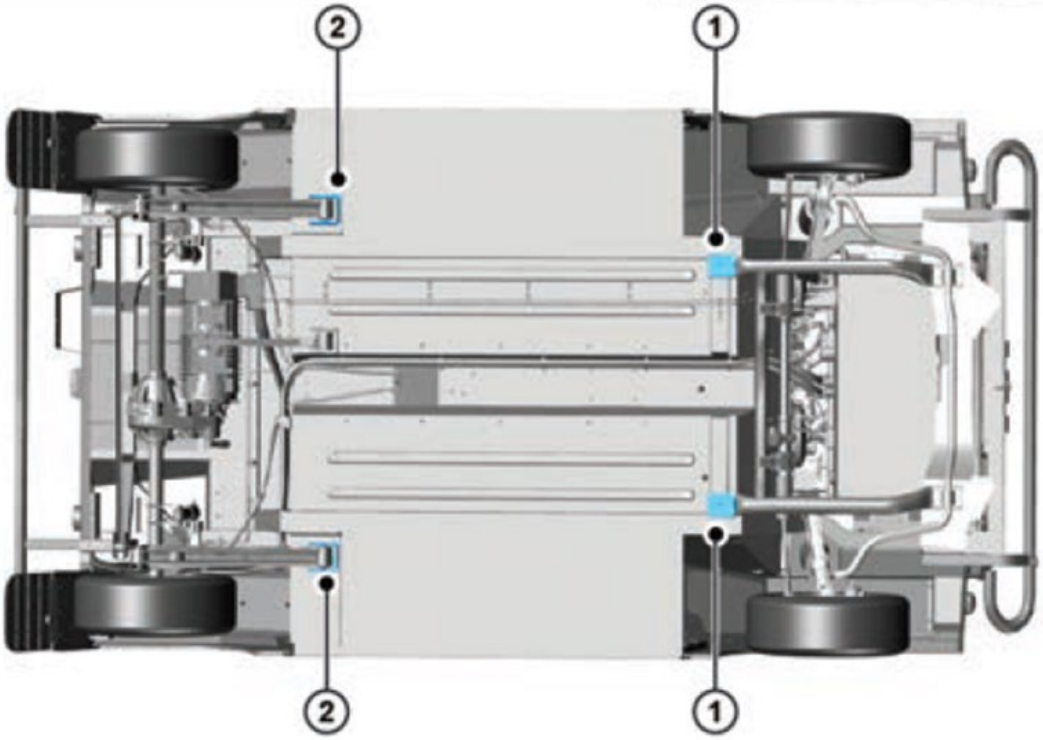

WARNING: Always choose a safe place to inspect the vehicle.

WARNING: Make sure all passengers are out of the vehicle and in a safe place.

WARNING: Make sure the vehicle is on stable and level ground.

WARNING: Firmly apply the parking brake.

WARNING: Make sure the jack is placed correctly under the vehicle.

WARNING: Never work under the vehicle with just jack as a support. Always use axle stands or suitable supports under the jacking points.

Note: switch on hazard lights. Position warning triangle or a flashing amber light 50 to 150 metres (150 to 500 ft) behind your vehicle to warn approaching traffic.

Note: before changing a wheel ensure the front wheels are in the straight-ahead position and apply the handbrake.

Observe the following precautions:
Ensure the jack is positioned on firm, level ground.
NEVER on soft ground or over metal gratings or manhole covers. DO NOT place additional material between the jack and the ground as this may jeopardise the safety of the jacking operation.

If jacking on a slope place chocks at the front and rear of the wheel diagonally opposite the one to be removed. NEVER jack the car with passengers inside.

WARNING: Never work beneath the car with the jack as the only means of support. The jack is designed for wheel changing only.

CAUTION: Never jack the car using any jacking points other than the designated points shown. Serious damage to the car could result in serious injury.

WARNING: Always check the tyre pressure after changing a wheel and have the tightness of the wheel nuts checked as soon as possible.

Position the jack under the jacking point nearest the wheel to be removed.
Turning the jack screw by hand, raise the jack until the jack head fits snugly under the centre of the jacking point. Ensure that the base of the jack is always in full contact with the road surface.

Before raising the car, remove the spare wheel from the back of the car.
Use the wheel nut spanner (wheel brace) to slacken each of the wheel nuts half a turn anti-clockwise.
Attach the jack handle and turn the jack screw clockwise to raise the car until the tyre is clear of the ground.
Remove the wheel nuts and wheel.

Note: Avoid placing wheels face down on the ground - the surface may be scratched.
Fit the spare wheel and tighten the wheel nuts (domed side towards the wheel) until the wheel is seated firmly against the hub.

Lower the car and remove the jack, then FULLY tighten the wheel nuts in a diagonal sequence.
Finally, return the tools and the wheel to their storage location.

VEHICLE RECOVERY TOWING

If your car is to be towed, only use a qualified recovery specialist. They will use a trailer, transporter or wheel lift equipment.

CAUTION: The vehicle should ideally be moved by trailer/transporter. If these facilities are unavailable, move the vehicle on a suspended tow (with the REAR wheels raised) with 'N' selected in the gearbox.

CAUTION: If it is essential for the car to be moved and no other option is available, it may be towed on all four wheels providing you adhere strictly to the following:
DO NOT allow the car to be towed further than 16 km (10 miles).
Restrict the towing speed to a maximum of 32 km/h (20 mph).

CAUTION: Where possible your car should not be towed.

The Towing Eye is supplied with the tool kit (x1).

The Tow Eye screws fully into the front bumper.

TRANSPORTER OR TRAILER LASHING

If the car is to be transported on the back of a trailer or transporter use the recommended lashing points at the front and rear of the car only.

CAUTION: Do not secure lashing hooks, 'T' bars or trailer fixings to any other part of the car. Lashing points can be found at the front left hand of the vehicle and the rear of the vehicle.

CAUTION: The eye under the rear of the vehicle MUST NOT be used for towing a trailer.

WARNING: DO NOT remove the starter key or turn the starter switch off while the car is being towed on four wheels - this will prevent the steering wheel from being turned.

Turn the starter key to the first position to unlock the steering and then to the second position to enable the brake lights, wipers and direction indicators to be operated if necessary.

Note: if, due to an accident or electrical fault, it is considered unsafe to turn the starter switch to the first position, disconnect the battery before turning the switch.
Place the gear lever in neutral and check the speedo for confirmation N.
Release the handbrake.

Note: while being towed observe the following:
Without the Electrical system running greater effort will be required to operate the brake pedal and longer stopping distances will also be experienced.

VEHICLE CLEANING AND PRECAUTIONS

Following the advice and instructions below will help you keep your vehicle's original finish.

TO BE AVOIDED

The use of a high pressure washer.
Washing the vehicle when it is in full sunshine.
Classic automotive polish which contains abrasive substances.
The application of anti-tar or other hydrocarbon-based substances on the plastic parts.
Washing with hot water during desalting operations (coastal areas, winter conditions).
Hot water increases the corrosive power of salt.

PREFERRED / RECOMMENDED

The use of a domestic pressure water jet, a soft brush and a specific automotive detergent.
Frequent rinsing with cold water in case of winter use (salting of roads) or use in coastal zone (seaspray).
The use of warm soapy water for interior cleaning with a thorough rinse.

STORAGE

If the vehicle is not used for a period longer than one month:

- Carry out a thorough washing of the vehicle, as well as complete drying.
- Fully charge the High Voltage battery using a suitable Electric Vehicle Charging Point (do not use a travel adaptor, extension lead, reel).
- Inflate the tyres to the correct tyre pressure.
- Store the vehicle in a dry and ventilated place, with the handbrake OFF and the High Voltage Fully charged.
- The High Voltage battery can be left on permanent charge. The Battery Management System will manage the charge rate while charging.
- When using a cover, only use a cover specifically designed for this purpose that is properly ventilated.
- When restarting, ensure the 12V battery is fully charged and check the tyre pressures.

Note: the warranty does not cover damage to the battery.

REAR STORAGE COMPARTMENT

All models are supplied with an emergency tool kit in the rear compartment.
This consists of:

1. A warning triangle
2. A jack
3. A wheel brace

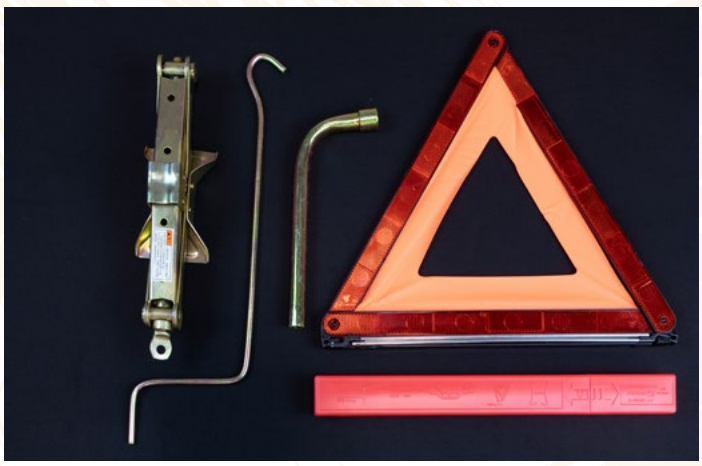

MOKE®

TECHNICAL SPECIFICATIONS

DRIVE

Steering	Available LHD or RHD
Driven Wheels	Rear Wheel Drive
Transmission	Automatic
Suspension Type	Coiled Spring F/R
Body Type	Cabriolet
Brakes Front	Disc
Brakes Rear	Drum
Wheels	Steel
Top Speed	80km/h
Range	88km
Powertrain	10.5kW
Max Power	28kW
Max Torque	100nm
Max Voltage	108v
Nominal	87v
Min Voltage	72v

DIMENSIONS

Overall Length	3471mm
Overall Width	1640mm
Overall Height	1566mm
Wheelbase	2246mm
Unladen Mass	741kg
Front Axle Max Mass	680kg
Rear Axle Max Mass	565kg
Max Payload	524kg
Ground Clearance	Front Axle - 179mm
	Rear Axle - 149mm
Approach Angle	32 Degrees
Departure Angle	44 Degrees

BATTERY

Battery Type	Lithium-ion
Charge Type	Three Phase AC Synchronous
Charger Supplied	Type 2
Battery State of Charge (@ shipping)	>50%
Battery Weight	77kg
Battery Dimensions	912mm Width
	304mm Height
	564mm Depth
Master Disconnect	Yes
Emergency HV Cut-off	Yes

ELECTRICAL

Headlights	LED
Daytime Running Lights	Yes
Turn Lamps	Yes - 4
Tail Lamps	Yes - 4
License Plate Lamp	Yes
Windscreen Wash	Front
Heated Front Screen	Yes
Speedometer Range Indicator	MPH or KPH
Battery Temp Indicator	Yes
12v Battery	Yes
AVAS (Acoustic Vehicle Alerting System)	Yes
Radio	FM / AM / DAB / Bluetooth
Waterproof Speakers	Yes - 2
Drive Mode Switch	Yes - 3 Modes

INTERIOR

Front Seats	Front Fully Adjustable
Rear Seats	Rear Bench Seat (ISOFIX)
Upholstery	Black Weatherproof
Seat Belts	4 Three Point Seat Belts
Seat Number	4
Steering Wheel Adjust	No
Bumper Front and Rear	Yes
Occupant Seat Sensors	Yes

EXTERIOR

Road Emergency Kit	Yes
Tyre Jack	Yes
Floor Trim	Black Rubber Mats
Start Key	Mechanical
Wing Mirrors	Yes - 2
Mud Flaps	Yes - 2
Bimini Roof	Standard

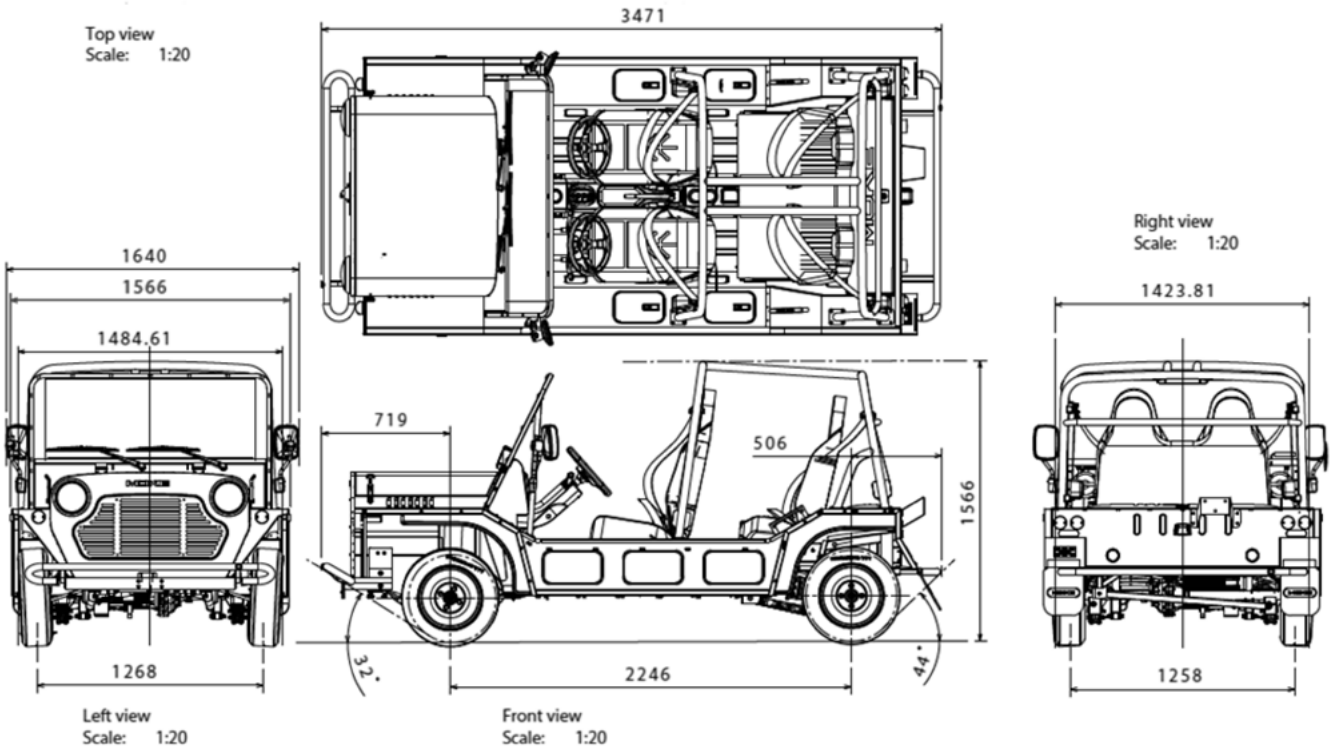

MOKE®

SERVICE SCHEDULE AND MAINTENANCE RECORD

WARNING: The following maintenance schedules must be respected to ensure vehicle safety and reliability.

WARRANTY CONDITIONS

Correction of defects by repair or replacement of the defective part(s), the choice of repair or replacement belonging to MOKE.
Transfer of Ownership for Study, Safety and Analysis Purposes: for the benefit of Moke International Ltd for any replaced part under the warranty.
Correction of manufacturing defect which are not the result of using vehicle in unintended conditions or misuse.

DURATION OF WARRANTY

Period starting from the purchase date.
This warranty covers the replacement (or repair) of defective recognized spare parts (parts and labour cost).
2-year/50,000km vehicle and power train warranty.
2-year corrosion warranty (requires inspection and correct documentation).

CONDITIONS OF APPLICATION OF THE WARRANTY

The vehicle must have received, in a timely manner and from a Distributor approved by Moke International Ltd, all periodic inspections and maintenance operations as contained in this manual.
The vehicle must not have undergone any technical modification not explicitly authorised by MOKE.
The vehicle must not have been fitted with parts not explicitly authorised by MOKE.
The vehicle must be used for the purpose for which it was designed.

EXCLUSION OF THE WARRANTY

The so-called “wear parts”, in particular: lighting and signal bulbs, brake lining, control cable, lubricants, brake fluid and tyres.
Vehicle maintenance costs in accordance with the maintenance schedule and the manufacturer’s requirements.
Repair of damage caused by improper use of the vehicle.
Costs resulting from the immobilization of the vehicle during its repair (vehicle rental, insurance, replacement vehicle for transportation).
Damage resulting from crash, fires, theft or attempted theft, riots.
Damage resulting from natural phenomena such as hailstorms, floods, tree sap, or artificial fallout. For example, salting of roads, application of unsuitable maintenance products (polish), use of solvent or high-pressure cleaner for cleaning.

ASSIGNMENT OF THE VEHICLE/MAINTENANCE OF THE BENEFIT OF THE GUARANTEE

The successive owners of the vehicle benefit from the remaining time of this guarantee, provided that the conditions of application have been fully fulfilled by each of the owners of the vehicle.
Any exception to these warranty conditions will only be deemed valid and accepted with the express written agreement of Moke International Ltd .

The legal warranty, guaranteeing the buyer against all consequences of hidden defects of the thing sold or service rendered, applies.

ELECTRIC MOKE SERVICE SCHEDULE

Month	12	24	36	48	60	72	84	96	108	120
Distance (kms)	5,000	10,000	15,000	20,000	25,000	30,000	35,000	40,000	45,000	50,000
Initial Visual Inspection	C	C	C	C	C	C	C	C	C	C
Visual Inspection to Underside	C	C	C	C	C	C	C	C	C	C
Visual Inspection to Engine Bay	C	C	C	C	C	C	C	C	C	C
Visual Inspection of Battery and Motors	C	C	C	C	C	C	C	C	C	C
Visual Inspection to Suspension Components	C/R	C/R	C/R	C/R	C/R	C/R	C/R	C/R	C/R	C/R
Front and Rear Tyres	C/R	C/R	C/R	C/R	C/R	C/R	C/R	C/R	C/R	C/R
Front and Rear Brake pads/discs	C/R	C/R	C/R	C/R	C/R	C/R	C/R	C/R	C/R	C/R
Steering Operation	C	C	C	C	C	C	C	C	C	C
Tyre Pressure	C/A	C/A	C/A	C/A	C/A	C/A	C/A	C/A	C/A	C/A
Wheel Bearings	C	C	C	C	C	C	C	C	C	C
Hydraulic Brake Hoses	C	C	C	C	C	C	C	C	C	C
Handbrake Operation	C/A	C/A	C/A	C/A	C/A	C/A	C/A	C/A	C/A	C/A
Handbrake Cable Adjustment (15-20mm before braking)	C/A	C/A	C/A	C/A	C/A	C/A	C/A	C/A	C/A	C/A
Brake Fluid	C	R	C	R	C	R	C	R	C	R
Steering Shaft	C	C	C	C	C	C	C	C	C	C
Steering System	C	C	C	C	C	C	C	C	C	C
Charge Battery	P	P	P	P	P	P	P	P	P	P
12v Car Battery	T/R	T/R	T/R	T/R	T/R	T/R	T/R	T/R	T/R	T/R
Fault Test	T/R	T/R	T/R	T/R	T/R	T/R	T/R	T/R	T/R	T/R
Drive Test System	P	P	P	P	P	P	P	P	P	P
HV Cables	C	C	C	C	C	C	C	C	C	C
Transmission	C	C	C	C	C	C	C	C	C	C
Transmission Oil Change	R	C	C	C	R	C	C	C	R	C
In Car Entertainment	C	C	C	C	C	C	C	C	C	C
Lights	T	T	T	T	T	T	T	T	T	T

R= Replace C=Check G=Grease A=Adjust P=Perform T=Test

MOKE International Ltd (MIL) is a company registered in England and Wales under Company Number 09728676. Any liability (in negligence or otherwise) arising from any third party acting, or refraining from acting, on any information contained in this handbook is hereby excluded.